Block Diagram for Model AN-586 RHA with Integral Electronics

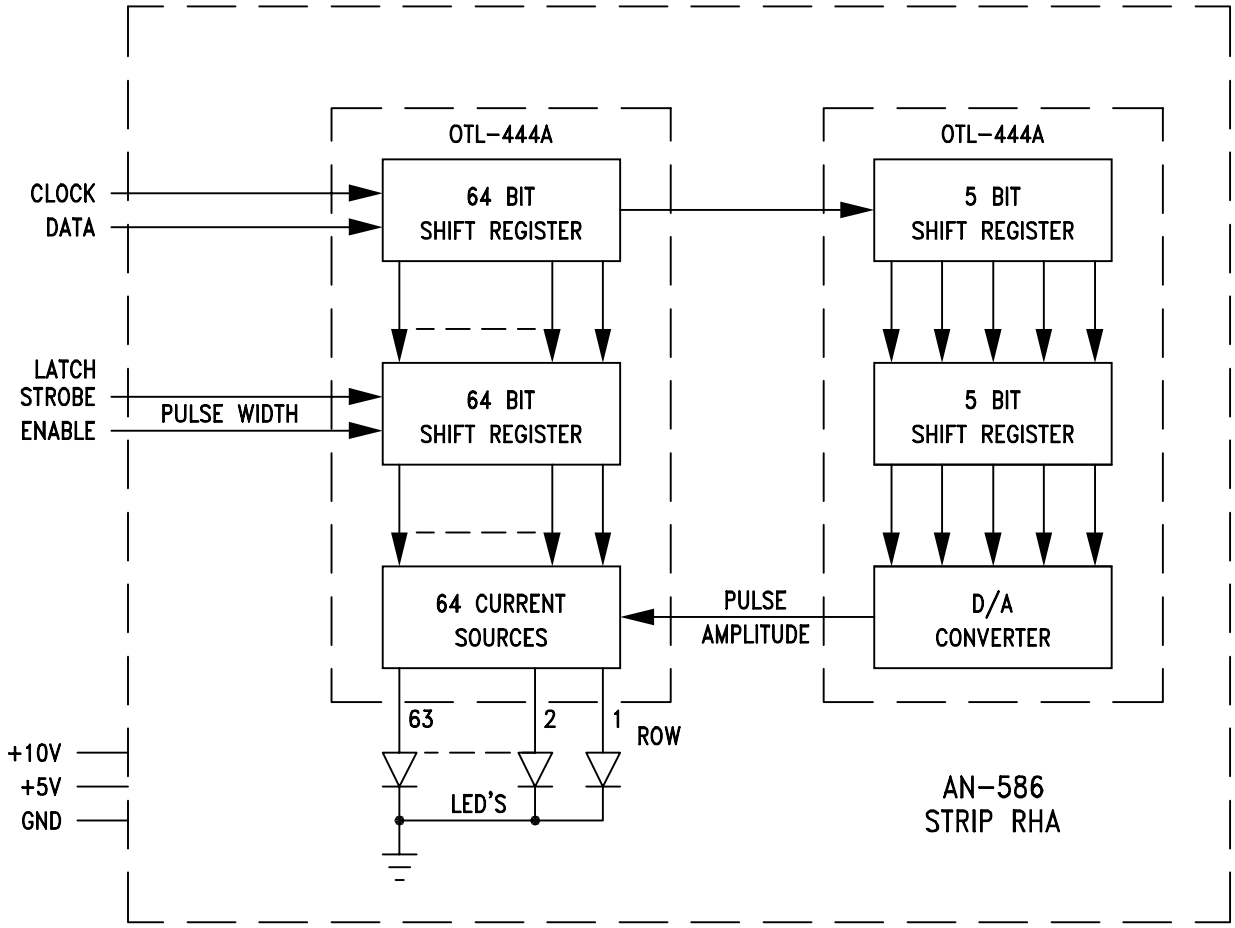

OPTOTEK LTD
62 Steacie Drive
Kanata, ON
Canada K2K 2A9

www.optotek.com

Phone: 613-591-0336
North America: 800-361-2911
Fax: 613-591-0584
E-mail: sales@optotek.com